WiFi Evaluation Getting Started

Amp’ed RF Technology, Inc.

www.ampedrftech.com

1. Overview

The Amp'ed RF WiFi Evaluation kit is a radio adaptor board which mounts onto a Linux BeagleBone (Texas Instruments) development platform. The radio adaptor board comes with either a WB61 or WF60 module, and is called the BB-WB361 or BB-WF360.

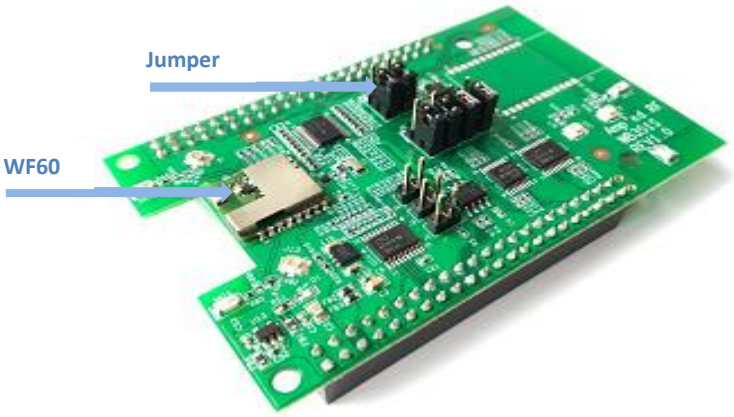

BB-WF360 adaptor board

For further BeagleBone information: http://beagleboard.org/bone/

2. BB-WF360 Setup

WF60 is a WiFi dual band module. For further information:
http://www.ampedrftech.com/products.php?product=WF60

SDIO serial interface pins:

Pin	Function
PT1	SDIO5
PT2	SDIO2
PT3	SDIO1
PT4	SDIO0
PT17	SDIO4
PT18	SDIO3
PT11	SDIO INT
PT12	WIFIRST

PT13	PMU EN
PT14	GND
PT15	VIN (3.6V Typical)

Notes:

- I/O pin signal level is 1.8V

3. BB-WB361 Setup

WB61 is a Wi-Fi & Bluetooth combo module.

SDIO serial interface pins:

Pin	Function
PT13	SDIO CMD
PT14	SDIO CLK
PT15	SDIO DATA3
PT16	SDIO DATA2
PT17	SDIO DATA0
PT18	SDIO DATA1
PT28	SDIO EXT INTERRUPT
PT19	PMU EN
PT20	WIFIRST
PT23	GND
PT24	VIN (3.6V Typical)

Notes:

- I/O pin signal level is 1.8V

4. Jumper Selection

The adaptor board requires jumpers when using the SDIO interface.

SDIO interface jumpers selection

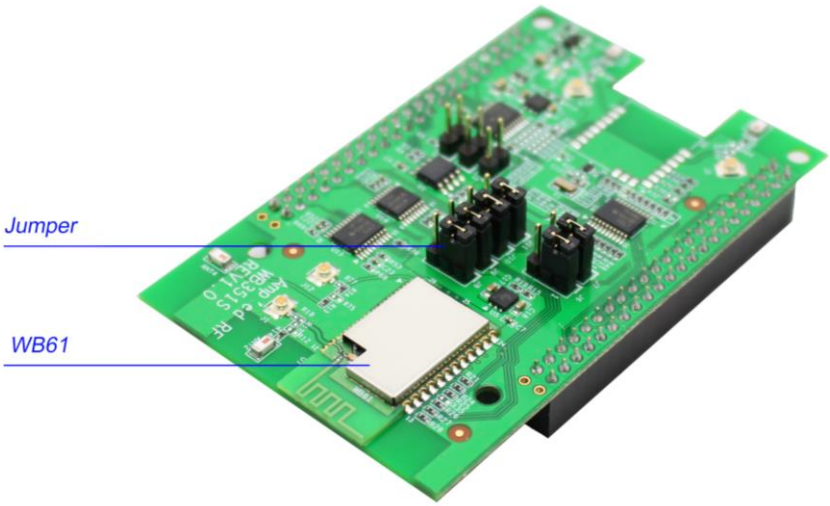

WF60/WB61S jumper selection

Resistance	WB61S	WF60
R65	0Ω	NC
R78	NC	0Ω

5. BeagleBone connections

MMC2 in the Beaglebone platform is used to connect to the WB351S.

Note that in am335x-boneblack.dts, MMC2 is redefined to MMC3.

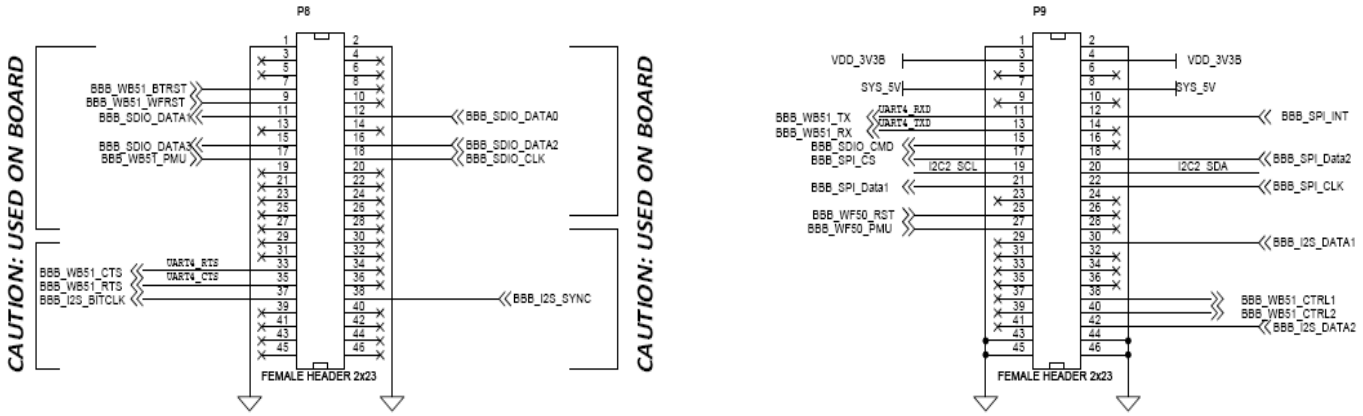

BB-WB361 expansion header

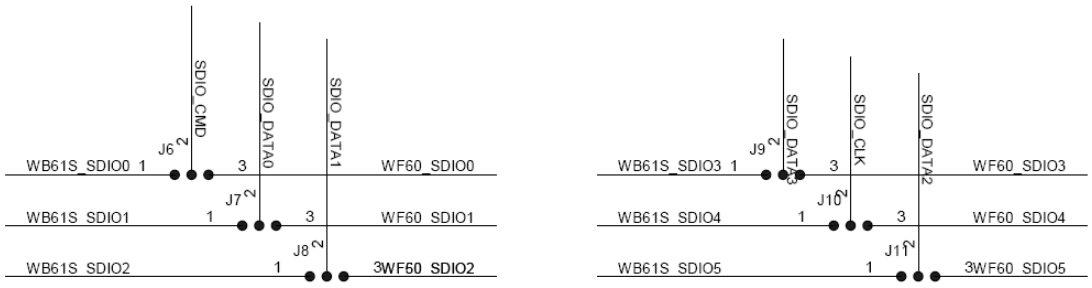

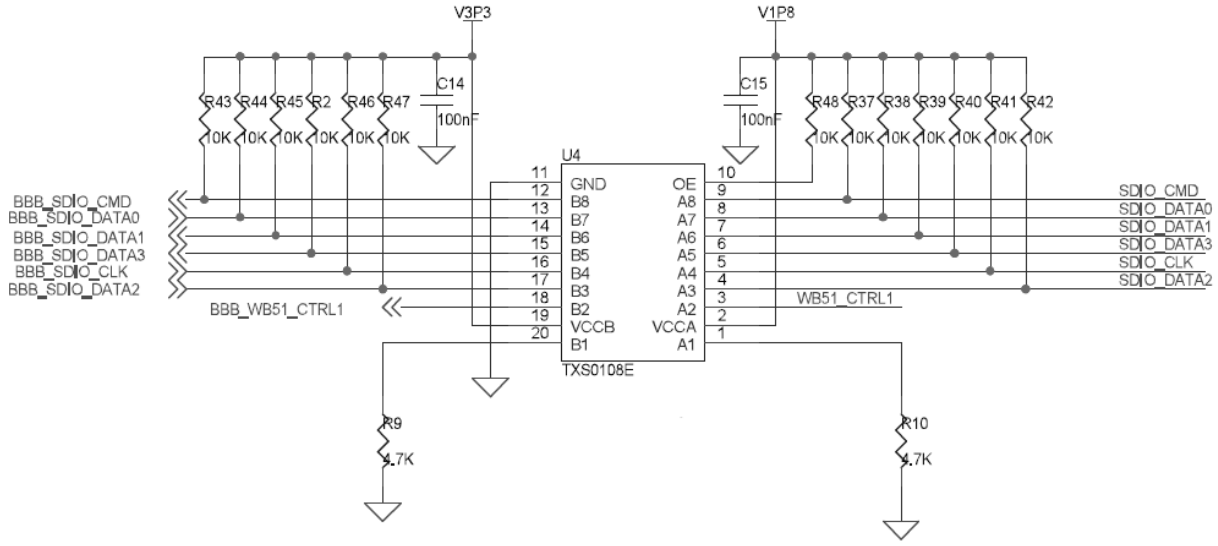

Level shifter for SDIO and control pins

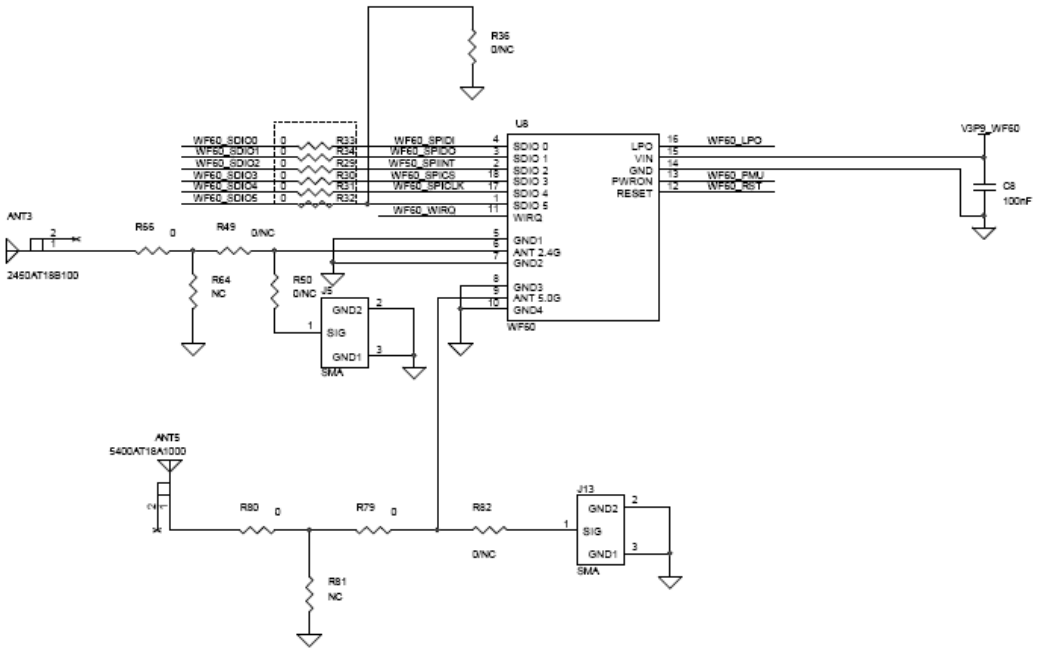

WF60 peripherals

6. USB interface

A USB interface is available on the BeagleBone:

- Connect with a PC via USB, and find the USB device named ”BeagleBone”

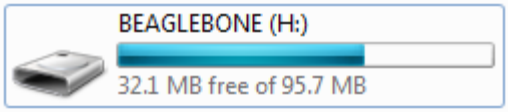

- See path: BeagleBone Getting Started→Drivers→Windows
- Find the driver called ”BONE_D64” and select it.

- Now find the virtual network form Network Connection

7. BeagleBone kernel download

The BeagleBoard evaluation image for the BB-WB361 is locate in the Download area of the Amp’ed RF website: http://www.ampedrftech.com/dnload.php. See the *BeagleBone Eval* folder and *utilities* Folder for the software files and test tools. Using tools such as SecureCRT for SSH login and SFTP access into the Beagle Bone Black (BBB) .The URL access for BBB is **192.168.7.2**. Use **root** access with the password as blank.

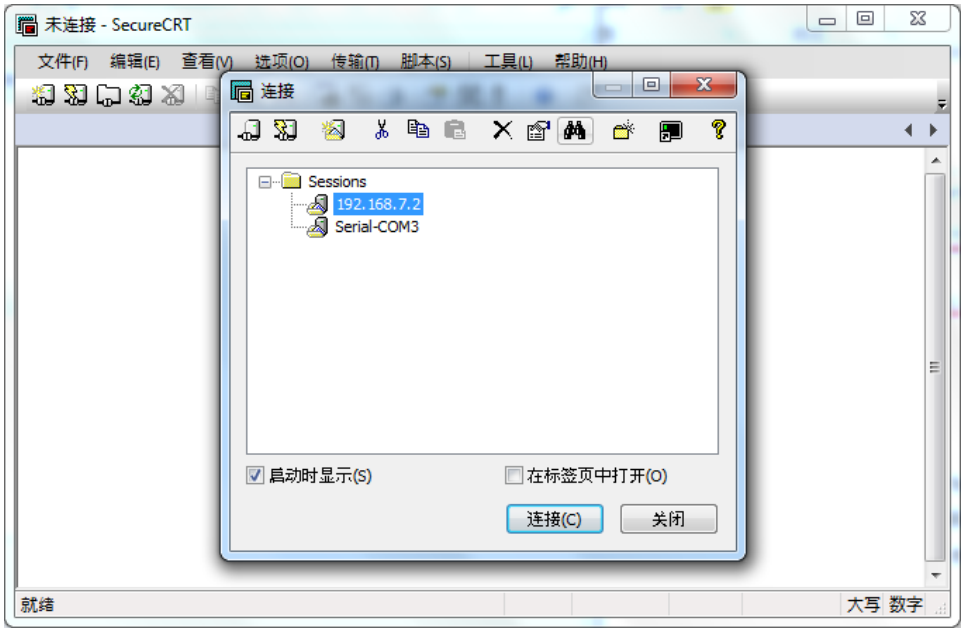
未连接 - SecureCRT
文件(F) 编辑(E) 查看(V) 选项(O) 传输(T) 脚本(S) 工具(L) 帮助(H)
连接
Sessions
192.168.7.2
Serial-COM3
启动时显示(S)
在标签页中打开(O)
连接(C)
关闭
就绪
大写 数字

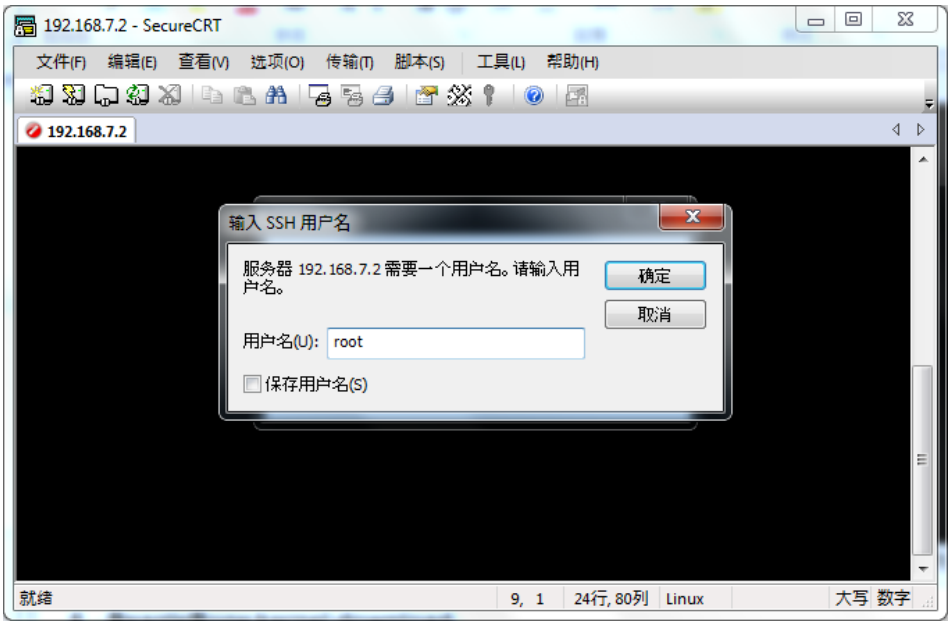
192.168.7.2 - SecureCRT
文件(F) 编辑(E) 查看(V) 选项(O) 传输(T) 脚本(S) 工具(L) 帮助(H)
192.168.7.2
输入 SSH 用户名
服务器 192.168.7.2 需要一个用户名。请输入用户名。
确定
取消
用户名(U): root
保存用户名(S)
就绪
9, 1
24行, 80列
Linux
大写 数字

```
192.168.7.2
Debian GNU/Linux 7

BeagleBoard.org Debian Image 2015-03-01

Support/FAQ: http://elinux.org/Beagleboard:BeagleBoneBlack_Debian

default username:password is [debian:temppwd]

Last login: Sun Mar  1 20:48:58 2015 from 192.168.7.1
root@beaglebone:~# cd /boot
root@beaglebone:/boot#
```

Check for the correct version of debian. Use the following command.

- cat /etc/debian_version

If the version is not **7.8**, it should be updated to debian version **7.8**. The process will involve writing an SD card with the correct version, booting from that SD card, editing the **/boot/uEnv.txt** file, and then rebooting. The following links should guide you in this process.

- http://www.beagleboard.org/latest-images
- http://beagleboard.org/getting-started#update
- http://elinux.org/Beagleboard:BeagleBoneBlack_Debian#Flashing_eMMC

```
192.168.7.2
Debian GNU/Linux 7

BeagleBoard.org Debian Image 2015-03-01

Support/FAQ: http://elinux.org/Beagleboard:BeagleBoneBlack_Debian

default username:password is [debian:temppwd]

Last login: Sun Mar  1 20:48:58 2015 from 192.168.7.1
root@beaglebone:~# cd /boot
root@beaglebone:/boot# cat /etc/debian_version
7.8
root@beaglebone:/boot#
```

For installation using the image file **ACC1340_160722_SDIO.rar**, follow these steps:

Copy from your local image	**To BBB**
`debian/tmp/boot/vmlinuz-4.1.13-cross`	`/boot/vmlinuz-4.1.13-cross`
`debian/tmp/boot/dtbs/4.1.13-cross`	`/boot/dtbs/4.1.13-cross`
`debian/tmp/lib/modules/4.1.13-cross`	`/lib/modules/4.1.13-cross`
`sdd_6010.bin (or newer sdd)`	`/lib/firmware`
`wsm_v2.3.bin (or newer wsm)`	`/lib/firmware`
`bootloader_1260.bin`	`/lib/firmware`

Make a copy of the the image using the following command.

```
cp /boot/initrd.img-3.8.13-bone70 /boot/initrd.img-4.1.13-cross
```

Edit the /boot/uEnv.txt file and set uname_r to 4.1.13-cross.

```
uname_r=4.1.13-cross
```

- Reboot BBB via `reboot` command. The BeagleBone will switch to 4.1.13
- You can verify what is running by the command "**uname –r**".

8. WiFi Functional Evalution

8.1. Software configurations

Run the ACC1340 driver:

- modprobe cw1200_wlan_sdio (when using the SDIO interface)
- ifconfig wlan0 up

If power save mode is desired:

- iwconfig wlan0 power off

```
Debian GNU/Linux 7

BeagleBoard.org Debian Image 2015-03-01

Support/FAQ: http://elinux.org/Beagleboard:BeagleBoneBlack_Debian

default username:password is [debian:temppwd]

Last login: Sun Mar  1 20:46:18 2015 from 192.168.7.1
root@beaglebone:~# uname -r
4.1.13-cross
root@beaglebone:~# modprobe cw1200_wlan_sdio
root@beaglebone:~# ifconfig wlan0 up
root@beaglebone:~# iwconfig wlan0 power off
root@beaglebone:~#
```

8.2. Scan network

- iwlist wlan0 sc | grep SSID

```
root@beaglebone:~# iwlist wlan0 sc | grep SSID
                    ESSID:"Ampe'ed-Tech"
                    ESSID:"TEST"
                    ESSID:"Amp'ed_AP"
                    ESSID:"wf43s_AP"
                    ESSID:" AmpedRF"
                    ESSID:"meiyou"
                    ESSID:"MASTER"
                    ESSID:"xy"
                    ESSID:"TJZYHBKJ"
root@beaglebone:~#
```

8.3. Network join

- Create a new config file, `wpa_supplicant.conf`, for the wpa_supplicant application, and add the file into `dir /etc/wpa_supplicant`.

```
ctrl_interface=/var/run/wpa_supplicant
update_config=1
device_type=0-00000000-0

network={
ssid="Amp'ed_AP"
psk="12345678"
}
~
~
~
~
~
~
~
```

SSID

SSID

PASSWD

PASSWD

- Join the AP using wpa_supplicant command "`wpa_supplicant -i wlan0 -B -c /etc/wpa_supplicant/wpa_supplicant.conf`"
- Get the ip address using "`dhclient wlan0`"

```
root@beaglebone:~# dhclient wlan0
root@beaglebone:~# ifconfig
eth0      Link encap:Ethernet  HWaddr 54:4a:16:bf:86:eb
          inet addr:192.168.1.163  Bcast:192.168.1.255  Mask:255.255.255.0
          inet6 addr: fe80::564a:16ff:febf:86eb/64 Scope:Link
          UP BROADCAST RUNNING MULTICAST  MTU:1500  Metric:1
          RX packets:15812 errors:0 dropped:0 overruns:0 frame:0
          TX packets:244 errors:0 dropped:0 overruns:0 carrier:0
          collisions:0 txqueuelen:1000
          RX bytes:1209947 (1.1 MiB)  TX bytes:34189 (33.3 KiB)
          Interrupt:56

lo        Link encap:Local Loopback
          inet addr:127.0.0.1  Mask:255.0.0.0
          inet6 addr: ::1/128 Scope:Host
          UP LOOPBACK RUNNING  MTU:65536  Metric:1
          RX packets:0 errors:0 dropped:0 overruns:0 frame:0
          TX packets:0 errors:0 dropped:0 overruns:0 carrier:0
          collisions:0 txqueuelen:0
          RX bytes:0 (0.0 B)  TX bytes:0 (0.0 B)

usb0      Link encap:Ethernet  HWaddr 0e:59:78:25:05:49
          inet addr:192.168.7.2  Bcast:192.168.7.3  Mask:255.255.255.252
          UP BROADCAST MULTICAST  MTU:1500  Metric:1
          RX packets:0 errors:0 dropped:0 overruns:0 frame:0
          TX packets:0 errors:0 dropped:0 overruns:0 carrier:0
          collisions:0 txqueuelen:1000
          RX bytes:0 (0.0 B)  TX bytes:0 (0.0 B)

wlan0     Link encap:Ethernet  HWaddr 02:80:e1:d8:d1:47
          inet addr:192.168.0.100  Bcast:192.168.0.255  Mask:255.255.255.0
          inet6 addr: fe80::80:e1ff:fed8:d147/64 Scope:Link
          UP BROADCAST RUNNING MULTICAST  MTU:1500  Metric:1
          RX packets:7 errors:0 dropped:0 overruns:0 frame:0
          TX packets:39 errors:0 dropped:0 overruns:0 carrier:0
          collisions:0 txqueuelen:1000
          RX bytes:1811 (1.7 KiB)  TX bytes:9045 (8.8 KiB)
```

8.4. Exchange data using IPERF Test tool.

- Run iperf3 application on the BeagleBone as server:

```
iperf3 -s -p 12345 //port:12345
```

```
root@beaglebone:~# iperf3 -s -p 12345
-----------------------------------------------------------
Server listening on 12345
-----------------------------------------------------------
Accepted connection from 192.168.0.107, port 62438
[  5] local 192.168.0.100 port 12345 connected to 192.168.0.107 port 62439
[ ID] Interval           Transfer     Bandwidth
[  5]   0.00-1.00   sec   621 KBytes  5.07 Mbits/sec
[  5]   1.00-2.00   sec   754 KBytes  6.19 Mbits/sec
[  5]   2.00-3.00   sec   907 KBytes  7.43 Mbits/sec
[  5]   3.00-4.00   sec   937 KBytes  7.68 Mbits/sec
[  5]   4.00-5.00   sec   766 KBytes  6.26 Mbits/sec
[  5]   5.00-6.00   sec   807 KBytes  6.61 Mbits/sec
[  5]   6.00-7.00   sec   952 KBytes  7.81 Mbits/sec
[  5]   7.00-8.00   sec   749 KBytes  6.13 Mbits/sec
[  5]   8.00-9.00   sec   751 KBytes  6.16 Mbits/sec
[  5]   9.00-10.00  sec   727 KBytes  5.95 Mbits/sec
[  5]  10.00-11.00  sec   786 KBytes  6.44 Mbits/sec
[  5]  11.00-12.00  sec   818 KBytes  6.70 Mbits/sec
[  5]  12.00-13.00  sec   892 KBytes  7.31 Mbits/sec
[  5]  13.00-14.00  sec   923 KBytes  7.56 Mbits/sec
[  5]  14.00-15.00  sec   900 KBytes  7.36 Mbits/sec
[  5]  15.00-16.00  sec   737 KBytes  6.05 Mbits/sec
[  5]  16.00-17.00  sec   937 KBytes  7.68 Mbits/sec
[  5]  17.00-18.00  sec   784 KBytes  6.42 Mbits/sec
[  5]  18.00-19.00  sec   845 KBytes  6.93 Mbits/sec
[  5]  18.00-19.00  sec   845 KBytes  6.93 Mbits/sec
- - - - - - - - - - - - - - - - - - - - - - - - -
[ ID] Interval           Transfer     Bandwidth
[  5]   0.00-19.00  sec  0.00 Bytes  0.00 bits/sec                  sender
[  5]   0.00-19.00  sec  15.8 MBytes  6.98 Mbits/sec                  receiver
iperf3: the client has terminated
-----------------------------------------------------------
Server listening on 12345
```

- Run iperf3.exe application as client on windows PC:

```
iperf3 -c 192.168.3.5 -p 12345 -t 60000
```

```
C:\Users\admin002\Desktop\iperf>iperf3 -c 192.168.0.100 -p 12345 -t 60000
Connecting to host 192.168.0.100, port 12345
[  4] local 192.168.0.107 port 62439 connected to 192.168.0.100 port 12345
[ ID] Interval           Transfer     Bandwidth
[  4]   0.00-1.00   sec   896 KBytes  7.34 Mbits/sec
[  4]   1.00-2.00   sec   768 KBytes  6.29 Mbits/sec
[  4]   2.00-3.00   sec   896 KBytes  7.34 Mbits/sec
[  4]   3.00-4.00   sec   896 KBytes  7.34 Mbits/sec
[  4]   4.00-5.00   sec   768 KBytes  6.29 Mbits/sec
[  4]   5.00-6.00   sec   896 KBytes  7.34 Mbits/sec
[  4]   6.00-7.00   sec   896 KBytes  7.34 Mbits/sec
[  4]   7.00-8.00   sec   768 KBytes  6.29 Mbits/sec
[  4]   8.00-9.00   sec   768 KBytes  6.29 Mbits/sec
[  4]   9.00-10.00  sec   640 KBytes  5.24 Mbits/sec
[  4]  10.00-11.00  sec   896 KBytes  7.34 Mbits/sec
[  4]  11.00-12.00  sec   768 KBytes  6.29 Mbits/sec
[  4]  12.00-13.00  sec   896 KBytes  7.34 Mbits/sec
[  4]  13.00-14.00  sec   896 KBytes  7.34 Mbits/sec
[  4]  14.00-15.00  sec   896 KBytes  7.34 Mbits/sec
[  4]  15.00-16.00  sec   768 KBytes  6.29 Mbits/sec
[  4]  16.00-17.00  sec   896 KBytes  7.34 Mbits/sec
[  4]  17.00-18.00  sec   768 KBytes  6.30 Mbits/sec
[  4]  18.00-19.00  sec   896 KBytes  7.34 Mbits/sec
[  4]  19.00-19.46  sec   512 KBytes  9.04 Mbits/sec
- - - - - - - - - - - - - - - - - - - - - - - - -
[ ID] Interval           Transfer     Bandwidth
[  4]   0.00-19.46  sec  16.0 MBytes  6.90 Mbits/sec                  sender
[  4]   0.00-19.46  sec  0.00 Bytes  0.00 bits/sec                  receiver
```